UNIVERSAL REVERSIBLE
SR-30

1. Actuator arm
2. KA22 action magnet
3. Wiring terminal
4. Positioning spring
5. Actuator stops
6. Combination rocker connector
7. Reversible to rocker connecting link
8. Actuator
9. Actuator flip spring
10. Magnet armature stop

Note: Sockets must be removed when soldering

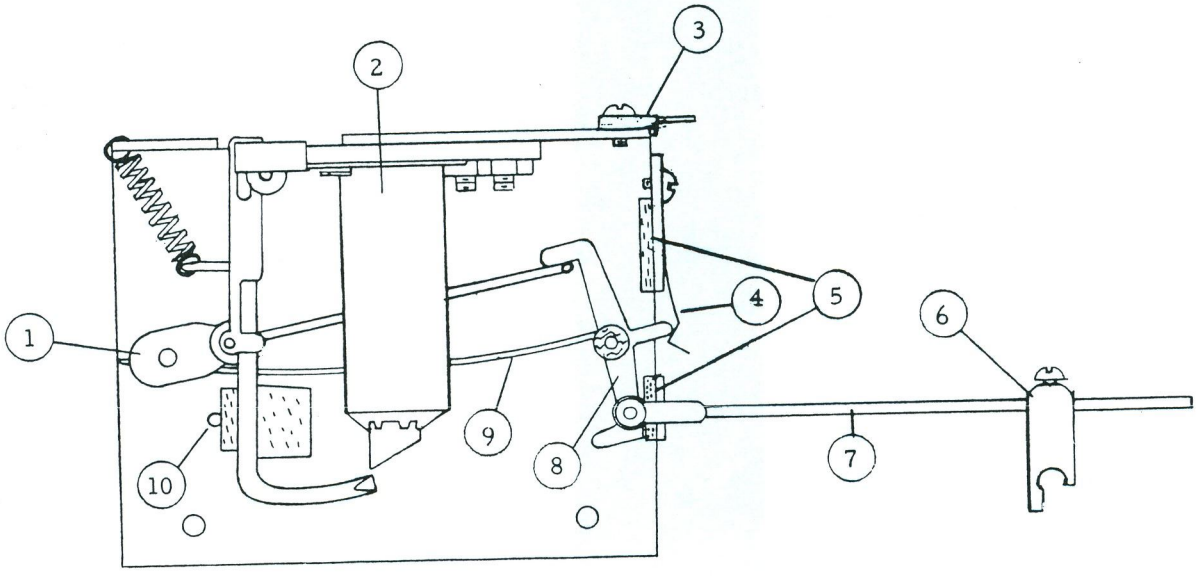

Fig. 9

Reversible Adjustments

1. Clearance between actuator arm (#1) and the contact portion of actuator (#8) should be approximately 1/32". If needed, adjust armature stop (#10).

2. After mounting reversible, rocker connector (6) is snapped over its proper combination rocker. To maintain link (7) parallel with the combination side rails, the ears of rocker connector (6) should straddle the appropriate piston slide.

3. Link (7) through rocker connector (6) is adjusted so that uniform contact is made in both positions between actuator stops (5) and actuator (8).

4. Positioning spring (4) may be swivelled out of the way if sufficient toggle action is available through link (7).