1. Contacts
2. Contactor holder
3. Contact support strip, removable for wiring simplification

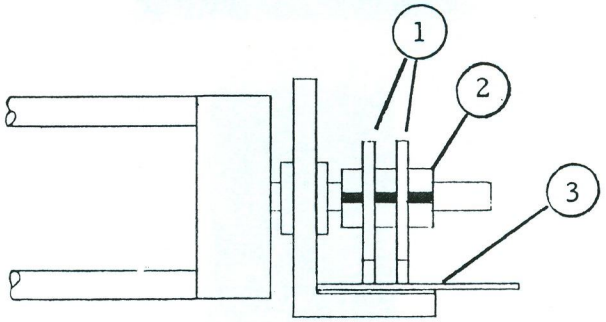

Fig. 7

CONTACT AND ROCKER CONTACTOR ASSEMBLY

1. Slide
2. Return spring
3. Slide stop
4. Cork strip

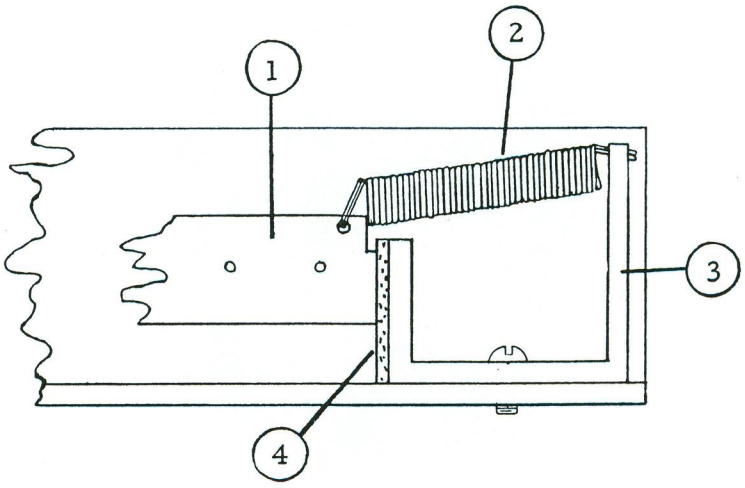

Fig. 8

CROSS SECTION VIEWED FROM STOPBOARD AT SPRING END