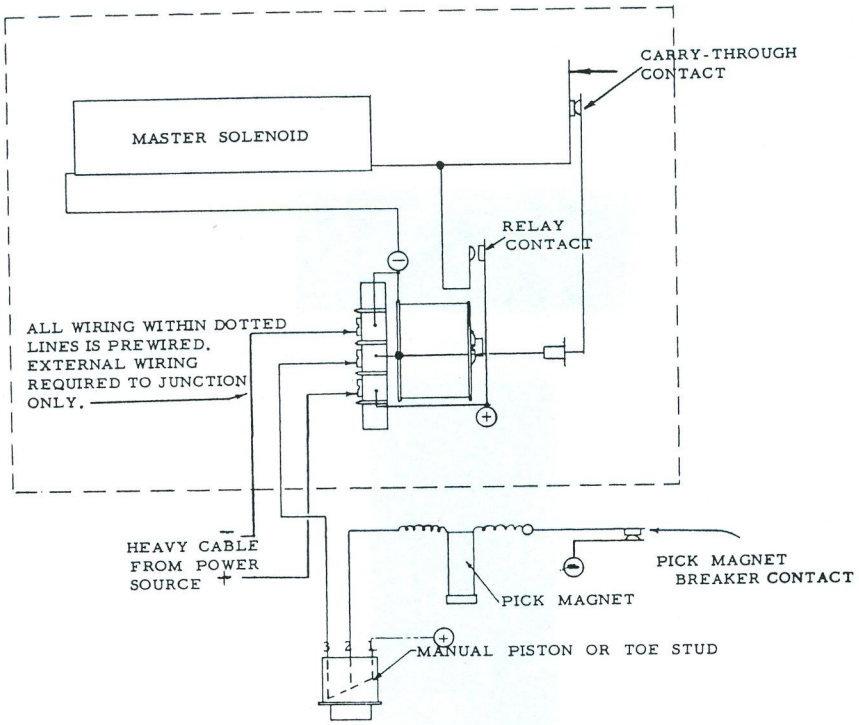

Fig. 5

ELECTRICAL CIRCUIT OF TRIPPER TYPE COMBINATION ACTION

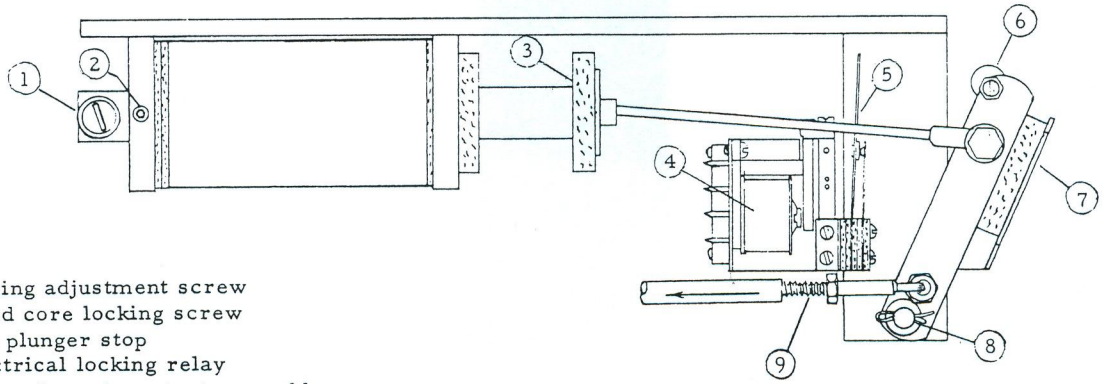

1. Closing adjustment screw
2. Fixed core locking screw
3. Felt plunger stop
4. Electrical locking relay
5. Carry-through contact assembly
6. Contact operating cam
7. Return stop
8. Lever arm bearing
9. Saddle arm adjustment

Fig. 6

MASTER SOLENOID ASSEMBLY
(For solenoid adjustments, see steps 1, 2 & 3 of Adjustments)

Installation procedures

The combination action is internally wired. For external connections, see Fig. 5.

In checking voltages following installation, check only at the master solenoid's power junction and then only while a piston is depressed. This will read actual operating voltage at the master solenoid.

The action is designed for operation at 12 volts DC and is tested prior to shipment on 10 volts DC. However, 10 volt operation is not recommended except with a regulated power supply and then only in communities having relatively constant line voltage.