Klann Tripper Type Combination Action Instructions

Manufactured *Sy KLANN,* INC.

WAYNESBORO, VIRGINIA 22980

This all-metal, tripper type combination has been designed to eliminate the need for regulation or adjustment. This was achieved by the observation of rigid tolerances, strict manufacturing procedures and elaborate tooling.

SUGGESTED MOUNTING MEANS

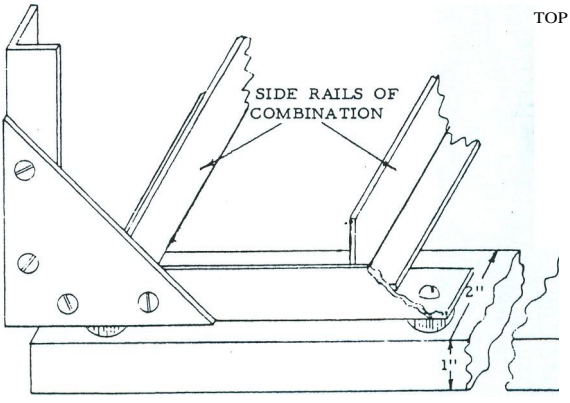

ELEVATE THIS RAIL SO STOPBOARD IS SQUARE W1TH CONSOLE CASE

PLACEMENT OF MOUNTING RAIL TO BE SUCH THAT DIMENSION 'X' IS AT LEAST 1". THIS W1LL ENABLE THE ACTION TO REST AGAINST THE CONSOLE TOP BACK RAIL WHEN RAISED.

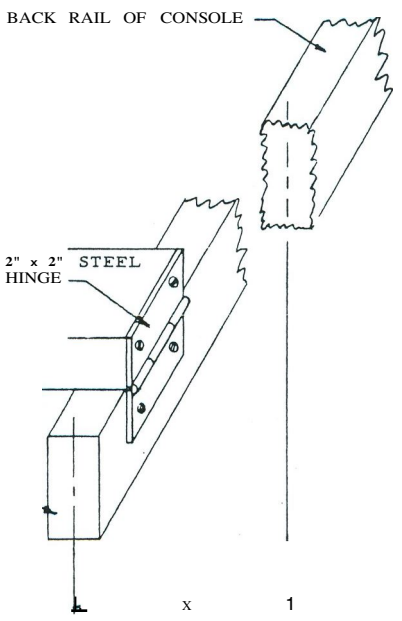

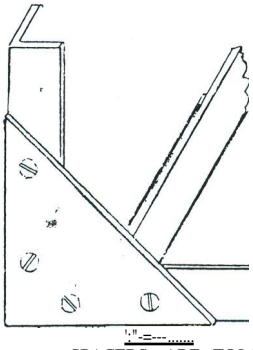

SPACERS ARE TOJ..LLoW CLEARANCE FOR COMBINATION FRAME HARDWARE

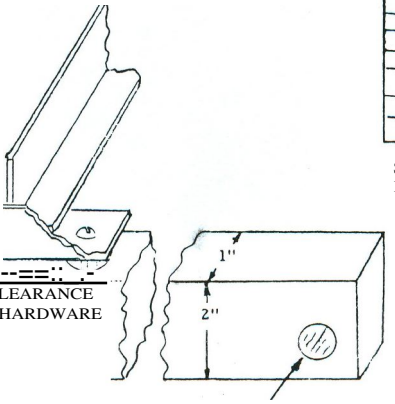

THIS HOLE IS FOR PIVOTING ON A SHAFT. POSITIONING COLLARS ARE RECOMMENDED TO AID ALIGNMENT IN RAISING AND LOWERING.

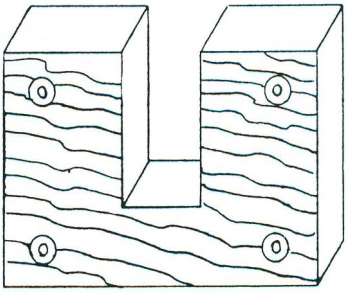

SUGGESTED MOUNTING BLOCKS FOR EITHER RAIL OR SHAFT